VANTRUNK INTELOK® SERRATED CHANNEL

INTELOK BRAKETRY & BEAM CLAMPS

Brackets are primarily designed to be used to provide mechanical strength and reinforcement to a joint when used to connect channel together. The Vantrunk Steel Framing System comes equipped with one of the industry's most comprehensive and versatile range of brackets. The Steel Framing Brackets allow for infinite varieties of permanent and temporary supporting frameworks to be created.

Every Bracket in the Vantrunk Steel Framing Range comes complete with a 15.2mm fixing hole to accommodate fixings up to and including M12.

The Steel Framing Range of Brackets are manufactured in either Hot Dip Galvanized Mild Steel or Stainless Steel316 Marine Grade. Vantrunk Steel Framing Brackets manufactured in Carbon Steel have a material gauge of 6mm and brackets manufactured in Stainless Steel have a material gauge of 5mm.

All Steel Framing Brackets are manufactured out of steel with minimum yield strength of 170N/mm² in accordance with BS 6946.

The seven groups of brackets (see page 182) are all provided within the Steel Framing Brackets Range, which will accommodate all of our user's installation requirements. For more information on the Vantrunk Bracket Range please contact the Vantrunk Technical Team.

Please note that the diagrams are just one application of the bracket, some brackets may be used in several applications.

ACCREDITED TO THE FOLLOWING STANDARDS

CE

ENHANCED OPTION

VANTRUNK
INTELOK QF®
CHANNEL BRACKETRY

VANTRUNK RIS

Vantrunk's unique Intelok Quickfit System of brackets and cantilevers are factory assembled with channel nuts, setscrews, washers & special plastic sleeves. The sleeves ensure that the correct spacing is maintained between the bracket and the channel nut enabling it to be easily located and quickly assembled and also ensures that the channel nut is held captive in transit whilst allowing rotation of the fixing assembly during installation.

To install the Intelok Quickfit system of brackets & cantilevers the nuts are aligned with the open slot of the channel. The assembly is placed in position, the setscrew turned by hand through 90° to locate the channel nut under the return flange of the channel and the setscrew tightened. The channel nuts ensure positive location within the channel. The entire assembly operation takes approximately one third of the time required to fix similar brackets and cantilevers by the conventional spring nut method.

Why Quickfit your Brackets?

- Easier and quicker to assemble.
- Less components to order.
- Approximate 65% savings on installation time.
- Simplified stock control.
- Easier estimating.

Conventional bracket

- Number of individual components = 10
- Number of order items = 4
- Assembly time = 135 secs

QF Quickfit Bracket

- Number of individual components = 1
- Number of order items = 1
- Assembly time = 45 secs... **66.6% saving**

It couldn't be easier to order a Quickfit Bracket with our NEW Simplified Ordering System

1. All brackets with the QF symbol can be supplied as Quickfit.
2. Select the bracket part number required.
3. Add the suffix (-QF) for standard M10 Quickfit Brackets.
4. or add (-QF12) for M12 fixings
5. For example 325XAS10SS becomes 325XAS10SS-QF

QUICK GUIDE...

FLAT PLATE BRACKETS

Flat Plate Brackets provide joint reinforcement between Steel Framing Channel on the same or on different planes.

90° ANGLE BRACKETS

90° Angled brackets allow for right angle joints within a channel framework.

ANGLE BRACKETS

Angled brackets come in a range of angles to provide reinforcement to angular channel joints in a framework.

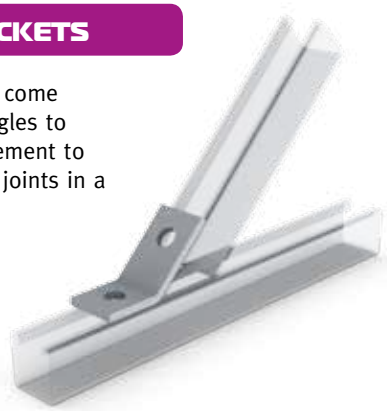

SUPPORT BRACKETS

Designed to offer support and mechanical strength to channels on many different planes.

SHAPED & TOP HAT BRACKETS

A captive fixing bracket used to secure channel side by side on the same plane or channel on a horizontal plane to channel on a vertical plane.

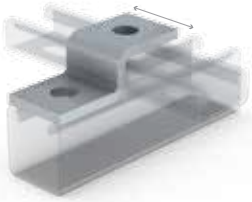

BASE PLATES

Base Plates are to be used for securing channel to the floor or wall and will help to distribute the concentrated load over a larger area.

BEAM CLAMPS

Beam Clamps are designed to secure Steel Framing Intelok Channel to secondary steelwork or building structures.

HOW TO ORDER

325AE10 / GA - QF

System & Bracket Type | Finish | QF option

*Quickfit Optional on some products, just add - QF to the appropriate finish code

FLAT PLATE BRACKETS

Internal Washer

Part No. GA 325AJ02
Part No. SS 325XAJ02

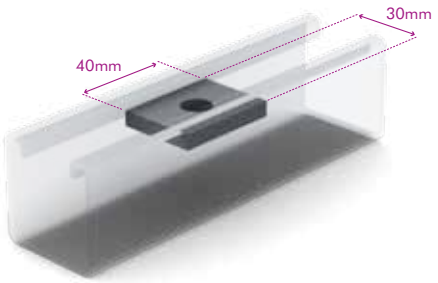

Square Washer

Part No. GA	Part No. SS	Hole Clearance
325AJ03	325XAJ03	M6
325AJ05	325XAJ05	M8
325AJ07	325XAJ07	M10
325AJ10	325XAJ10	M12

325XAJ10 also available QF

Available in: M6, M8, M10 & M12 Amend Code as Applicable.

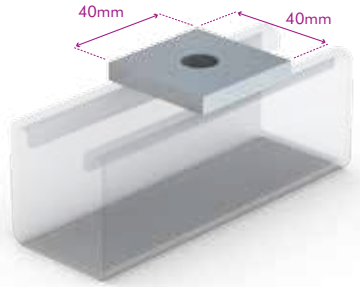

2 Hole Straight Bar QF

Part No. GA 325AD11
Part No. SS 325XAD11

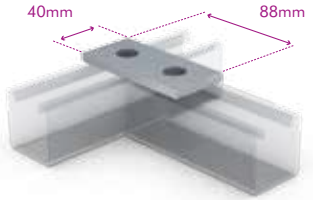

3 Hole Straight Bar QF

Part No. GA 325AC11
Part No. SS 325XAC11

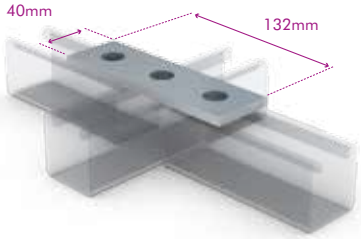

4 Hole Straight Bar QF

Part No. GA 325AC13
Part No. SS 325XAC13

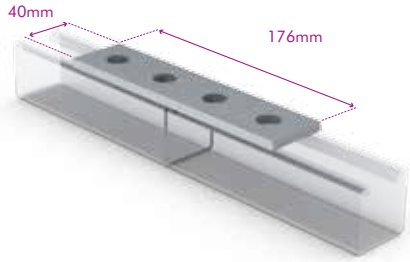

5 Hole Straight Bar QF

Part No. GA 325AY10
Part No. SS 325XAY10

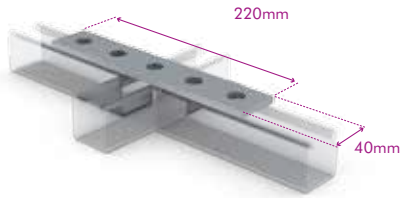

6 Hole Straight Bar QF

Part No. GA 325AY11
Part No. SS 325XAY11

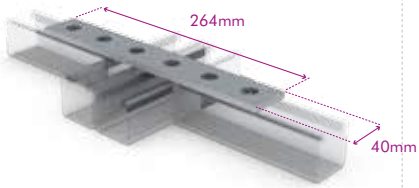

7 Hole Straight Bar QF

Part No. GA 325AY12
Part No. SS 325XAY12

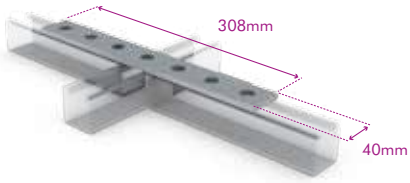

visit online at vantrunk.com

VANTRUNK INTELOK® SERRATED CHANNEL

'L' Shaped Bracket QF

Part No. GA 325AG10
Part No. SS 325XAG10

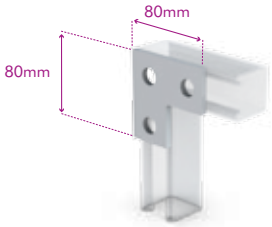

'T' Shaped Bracket QF

Part No. GA 325AF13
Part No. SS 325XAF13

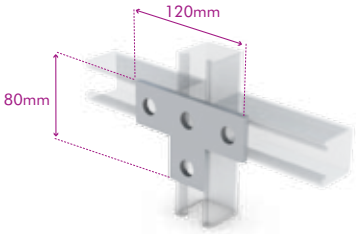

Fish Plate Joiner QF

Part No. GA 325AF15
Part No. SS 325XAF15

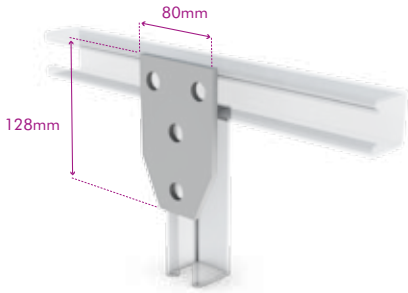

90° ANGLE BRACKETS

3 Hole Flat Plate QF

Part No. GA 325AF26
Part No. SS 325XAF26

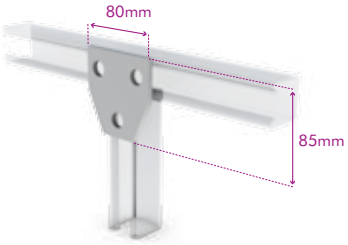

4 Hole Flat Plate QF

Part No. GA 325AF27
Part No. SS 325XAF27

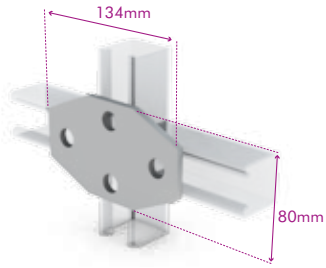

Wing 90° Angle Plate QF

Part No. GA 325AQ10
Part No. SS 325XAQ10

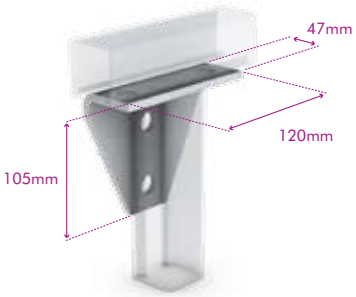

Large 90° Angle Plate QF

Part No. GA 325AQ11
Part No. SS 325XAQ11

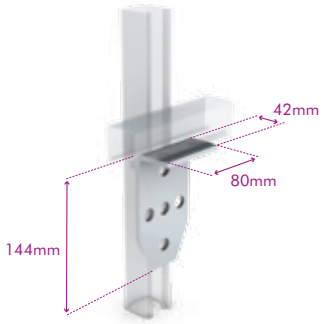

Medium 90° Angle Plate QF

Part No. GA 325AQ12
Part No. SS 325XAQ12

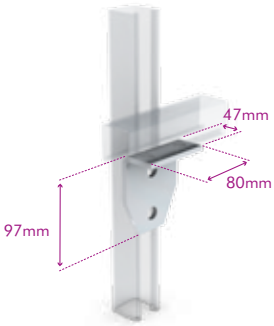

Small 90° Angle Plate QF

Part No. GA 325AQ14
Part No. SS 325XAQ14

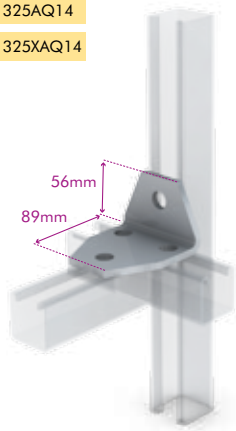

HOW TO ORDER **325AG10/SS*** System & Bracket Type Finish

*Quickfit Optional on some products, just add - QF to the appropriate finish code

Linear Right Angle Bar 1x1

Part No. GA 325AS10
Part No. SS 325XAS10

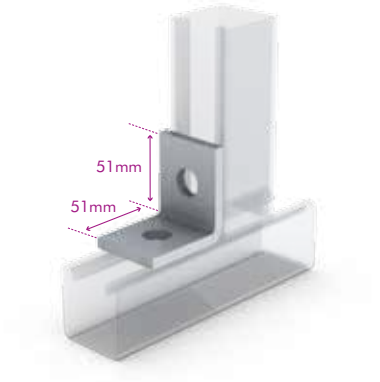

Perpendicular Right Angle Bar 1x1

Part No. GA 325AD10
Part No. SS 325XAD10

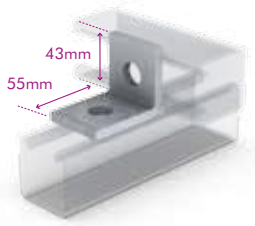

Linear Right Angle Bar 2x1

Part No. GA 325AC10
Part No. SS 325XAC10

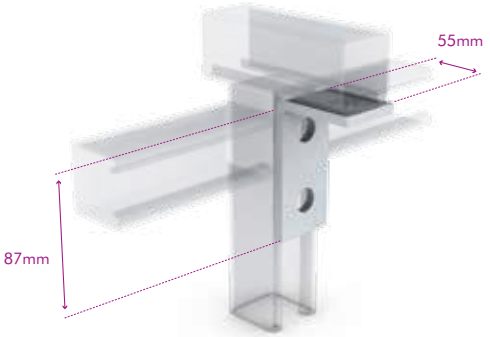

Perpendicular Right Angle Bar 2x1

Part No. GA 325AC09
Part No. SS 325XAC09

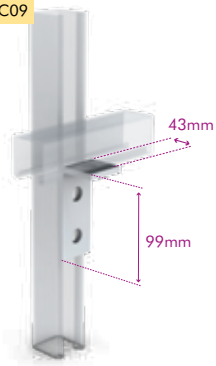

Linear Right Angle Bar 3x1

Part No. GA 325AE10
Part No. SS 325XAE10

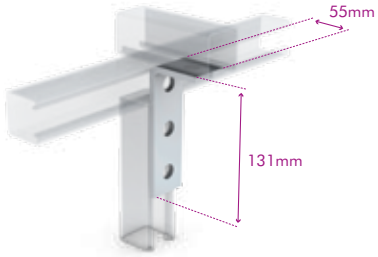

Linear Right Angle Bar 2x2

Part No. GA 325AE11
Part No. SS 325XAE11

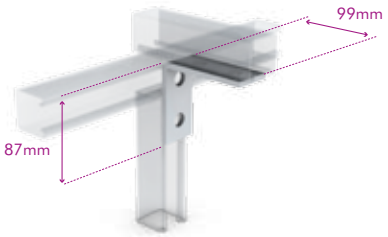

Right Angle Shelf Bracket

Part No. GA 325AE12
Part No. SS 325XAE12

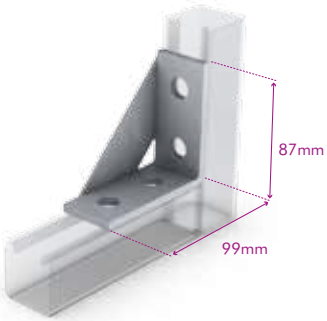

ANGLE BRACKETS

Acute Angle Bracket

Part No. GA 325AH11
Part No. SS 325XAH11

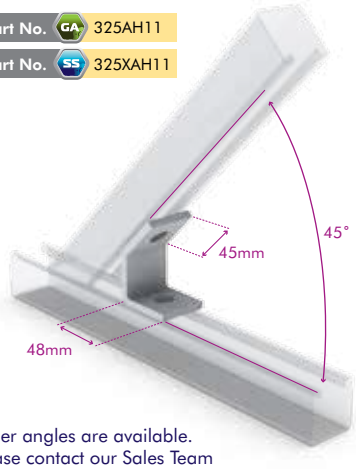

Other angles are available.
Please contact our Sales Team

visit online at vantrunk.com

VANTRUNK INTELOK® SERRATED CHANNEL

ANGLE BRACKETS CONTINUED

Obtuse Angle QF Bracket

Part No. GA 325AD17
Part No. SS 325XAD17

Other angles are available. Please contact our Sales Team

45º Angle Tee QF Bracket

Part No. GA 325AF14
Part No. SS 325XAF14

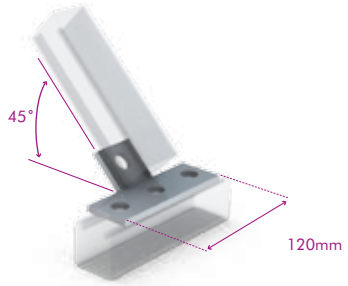

90º Angle Tee QF Bracket

Part No. GA 325AF10
Part No. SS 325XAF10

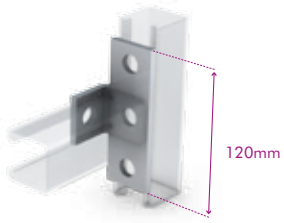

SUPPORT BRACKETS

Left Handed QF Tee Support

Part No. GA 325AF11
Part No. SS 325XAF11

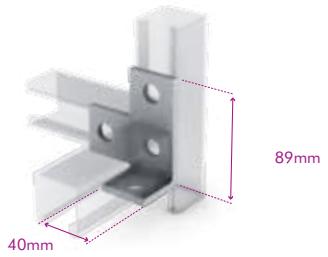

Right Handed QF Tee Support

Part No. GA 325AF12
Part No. SS 325XAF12

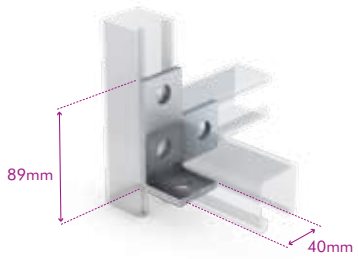

Left Hand One QF Bend L Support

Part No. GA 325AG12
Part No. SS 325XAG12

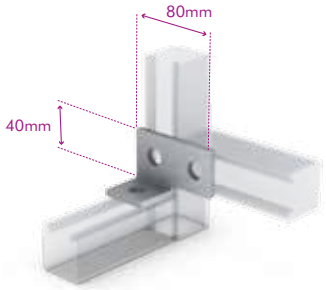

Right Hand One QF Bend L Support

Part No. GA 325AG13
Part No. SS 325XAG13

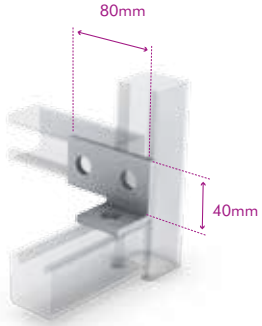

Left Hand Two QF Bend L Support

Part No. GA 325AG15
Part No. SS 325XAG15

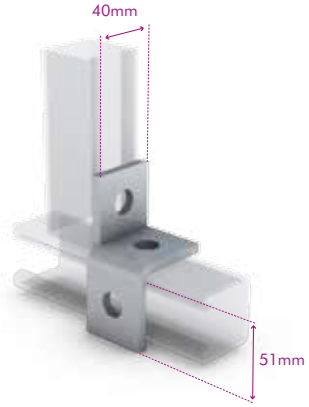

Right Hand Two QF Bend L Support

Part No. GA 325AG16
Part No. SS 325XAG16

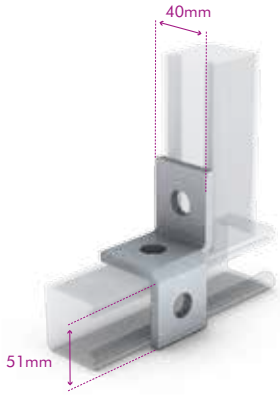

HOW TO ORDER **325AD17/GA*** System & Bracket Type Finish

*Quickfit Optional on some products, just add - QF to the appropriate finish code

Three Way Corner QF

Part No. GA 325AV02
Part No. SS 325XAV02

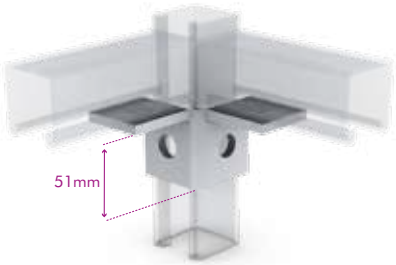

Three Leg Support QF

Part No. GA 325AV09
Part No. SS 325XAV09

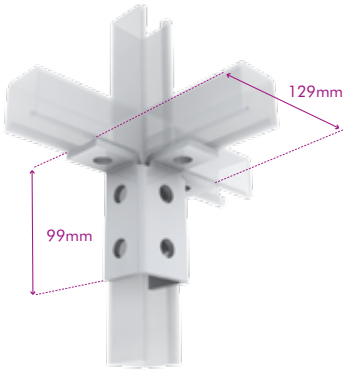

Two Leg Support QF

Part No. GA 325AV10
Part No. SS 325XAV10

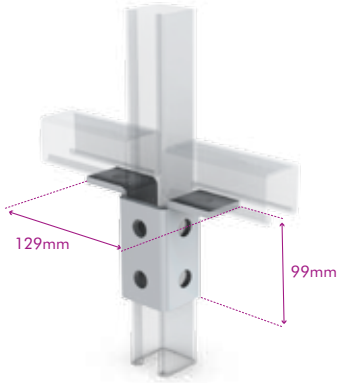

Cross Support QF

Part No. GA 325AB10
Part No. SS 325XAB10

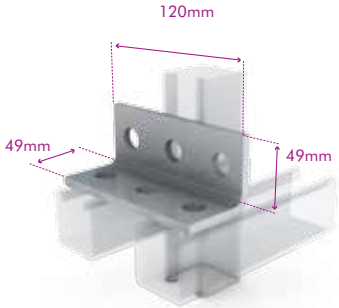

SHAPED BRACKETS

Shallow 'Z' Shaped Bar QF

Part No. GA 325AD28
Part No. SS 325XAD28

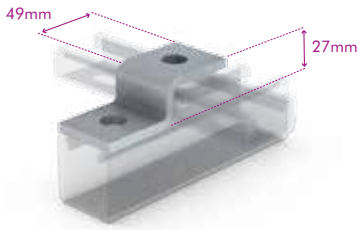

Deep 'Z' Shaped Bracket QF

Part No. GA 325AC12
Part No. SS 325XAC12

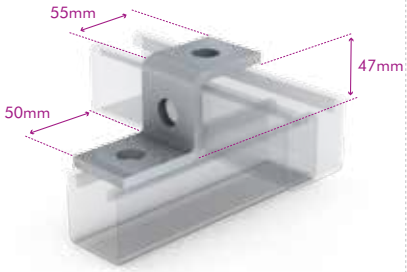

Deep Back to Back Shaped Bar QF

Part No. GA 325AU10
Part No. SS 325XAU10

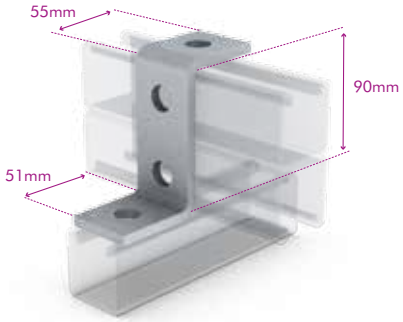

Back to Back Bracket QF

Part No. GA 325AT11
Part No. SS 325XAT11

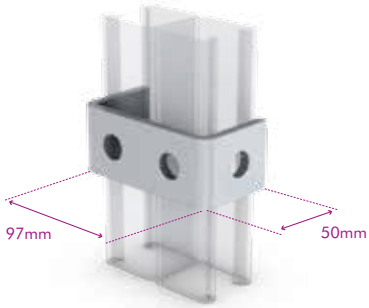

visit online at vantrunk.com

VANTRUNK INTELOK® SERRATED CHANNEL

Shallow Normal QF Top Hat Bracket

Part No. GA 325AJ13
Part No. SS 325XAJ13

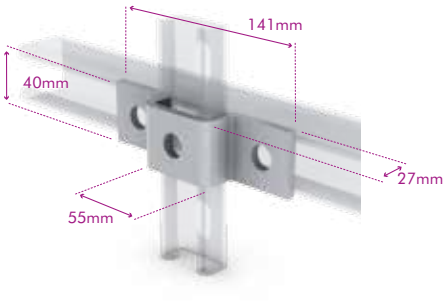

Deep Normal QF Top Hat Bracket

Part No. GA 325AJ12
Part No. SS 325XAJ12

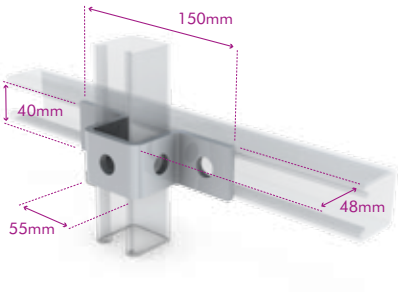

Back to Back Normal QF Top Hat Bracket

Part No. GA 325AFJ14
Part No. SS 325XAJ14

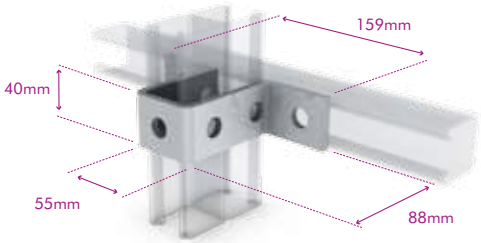

Back to Back Flat QF Top Hat Bracket

Part No. GA 325AJ11
Part No. SS 325XAJ11

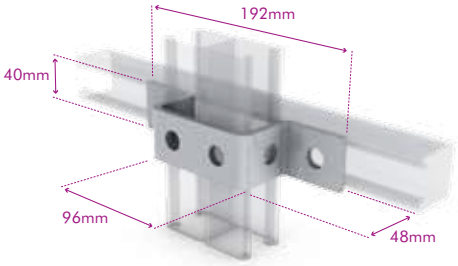

'W' Shaped Bracket QF

Part No. GA 325AU15
Part No. SS 325XAU15

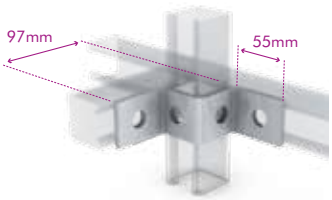

'U' Shaped Bracket QF

Part No. GA 325AJ15
Part No. SS 325XAJ15

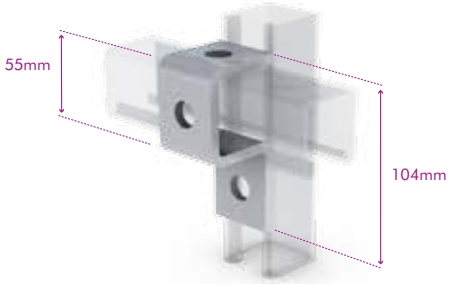

SUPPORT BRACKETS

Deep Offset QF Base Plate

Part No. GA 325AR10
Part No. SS 325XAR10

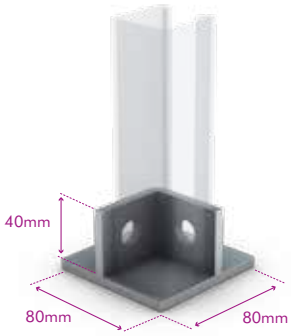

Deep Central QF Base Plate

Part No. GA 325AN10
Part No. SS 325XAN10

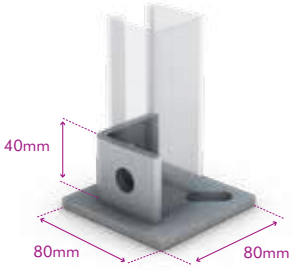

Back to Back Central Base Plate QF

Part No. GA 325AT10
Part No. SS 325XAT10

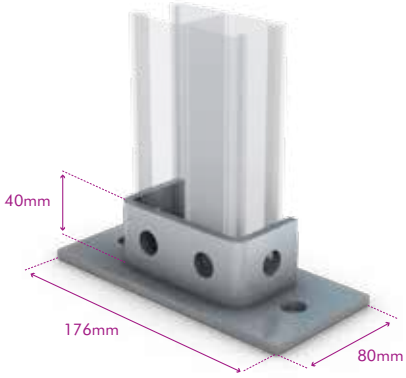

HOW TO ORDER **325AJ13/GA - QF 10**
System & Bracket Type Finish

*Quickfit Optional on some products, just add - QF to the appropriate finish code

Deep Tall Gusset Wing Fitting

Part No. GA 325AW01
Part No. SS 325XAW01

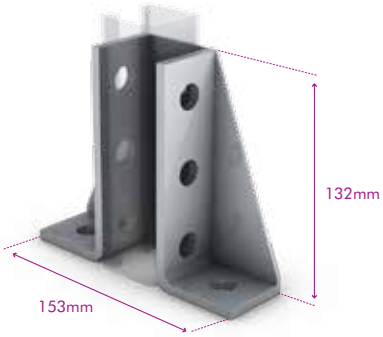

Back to Back Tall Gusset Wing Fitting

Part No. GA 325AW02
Part No. SS 325XAW02

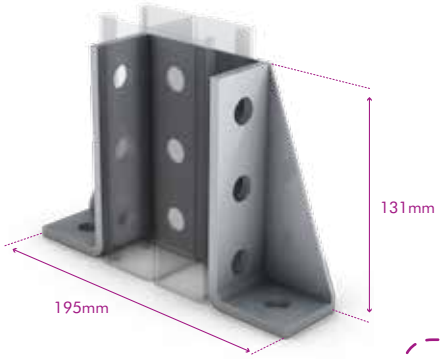

Deep Short Gusset Wing Fitting

Part No. GA 325AW03
Part No. SS 325XAW03

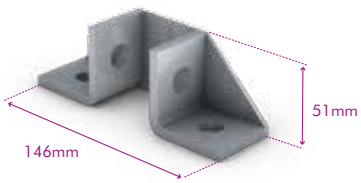

Back to Back Short Gusset Wing Fitting

Part No. GA 325AW04
Part No. SS 325XAW04

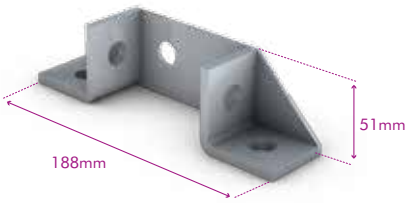

BEAM CLAMPS

Purlin Beam Clamp

Part No. GA 389AH10
Part No. SS 389XAH10

DON'T FORGET YOUR FIXINGS
SEE PAGE 232 FOR MORE DETAILS

BEAM CLAMPS CONTINUED

Beam Clamp

Part No. GA	Part No. SS	Thread Size	Max. Load
389AA07	389XAA07	M10	114kg
389AA08	389XAA08	M12	341kg

'Z' Shaped Beam Clamp QF

Part No. GA	Part No. SS	Max. Load as pair
325AP10	325XAP10	300kg

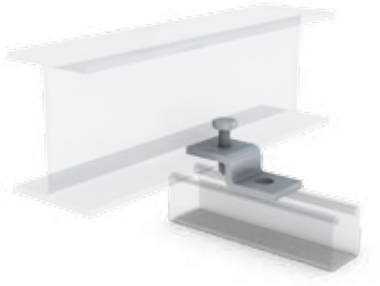

Flange range up to 17mm
Supplied with M10x40 Cone Point Screw

'J' Shaped Beam Clamp

Part No. GA	Part No. SS	Max. Load as pair
325AP11	325XAP11	300kg

Flange range up to 21mm

'C' Shaped Flange Beam Clamp

Part No. GA	Part No. SS	Max. Load as pair
325AX11	325XAX11	250kg

Flange range up to 18mm
Supplied with M12x40 Cone Point Screw

'C' Shaped Base Beam Clamp QF

Part No. GA	Part No. SS	Max. Load as pair
325AX10	325XAX10	300kg

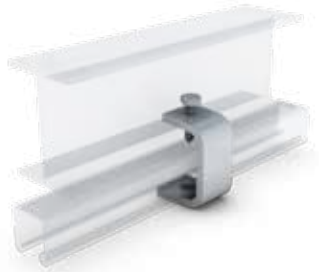

Flange range up to 17mm
Supplied with M10x40 Cone Point Screw

Medium Duty 'U' Bolt Beam Clamp

Part No. GA	Part No. SS	Max. Load as pair
325AM10	325XAM10	1100kg

Suitable for both Deep and Shallow Channel Flange range up to 25mm Supplied single and with M10x80 'U' Bolt, 2 x M10 Flat Washers and 2 M10 Hex Nuts

HOW TO ORDER **389AA10*** System, Bracket Type & Finish

*Quickfit Optional on some products, just add - QF to the appropriate finish code

Medium Duty Back to Back 'U' Bolt Beam Clamp

Part No. GA	Part No. SS	Max. Load as pair
Ref.325AM12	Ref.325XAM12	1100kg

Flange range up to 25mm Supplied single and with M10x128 'U' Bolt, 2 x M10 Flat Washers and 2 M10 Hex Nuts

Heavy Duty Back to Back 'U' Bolt Beam Clamp

Part No. GA	Part No. SS	Max. Load as pair
325AM13	325XAM13	1800kg

Flange range up to 25mm Supplied single and with M12x126 'U' Bolt, 2 x M12 Flat Washers and 2 M12 Hex Nuts

Extra Heavy Duty Back to Back 'U' Bolt Beam Clamp

Part No. GA	Part No. SS	Max. Load as pair
Ref.325AM14	Ref.325XAM14	1800kg

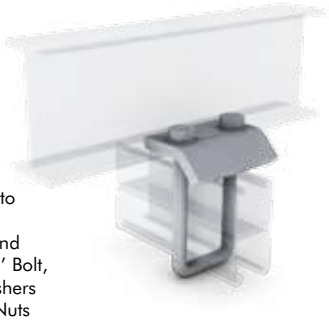

Flange range up to 25mm - 40mm Supplied single and with M12x146 'U' Bolt, 2 x M12 Flat Washers and 2 M12 Hex Nuts

Shallow Window Beam Clamp

Part No. GA	Part No. SS	Max. Load as pair
325AL11	325X AL11	500kg

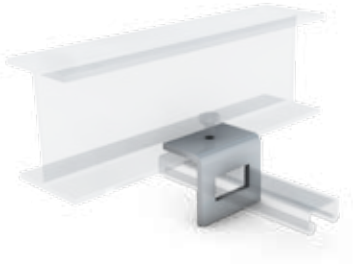

Flange range up to 15mm
Supplied with M10x40 Cone Point Screw

Deep Window Beam Clamp

Part No. GA	Part No. SS	Max. Load as pair
325AL10	325X AL10	500kg

Flange range up to 15mm
Supplied with M10x40 Cone Point Screw

Deep Back to Back Window Beam Clamp

Part No. GA	Part No. SS	Max. Load as pair
325AL09	325X AL09	500kg

Flange range up to 15mm
Supplied with M10x40 Cone Point Screw

visit online at vantrunk.com